CYGNUS electronics

DATASHEET

CY-S2004-240

Data sheet

4 Ports PoE Ethernet Industrial Grade Switch

Full Gigabit unmanaged PoE access switch

- Provide 2 optical and 2 Ethernet uplink ports, (1 optical port and 1 Ethernet port are Combo ports);
- Provide 4 x 10 / 100 / 1000 Mbps adaptive downlink ports, all support IEEE802.3af/at;
- Support port (Auto MDI/MDIX) function;
- Standard DC port and green terminal port, support power adapter with different connectors power;
- Redundant power design, support power hot backup;
- Fanless wavy metal shell with heat dissipation design ;
- Fast installation and easy operation, convenient for wall, din rail and desktop installation

Introduction

The switch is designed for the demands of high power IP camera, dome camera data access and PoE power supply mainly. The downlink ports accord with POE+ standard. Each port supports Max output 60W for camera, which solves the problem of camera power supply. With 2* optical and 2* Ethernet uplink port, available for link connections, which is widely used in highways, intersections and other network HD video surveillance system. All downlink ports support gigabit bandwidth design, which satisfy the bandwidth needs of each network device access sufficiently. In terms of power port, there is standard DC port and green terminal port, convenient for customers to choose and improving the stability of power supply. Meanwhile, the use of US industrial Marvell chip ensures the stable operation of the switch. Besides, the switch satisfies the demand of complex environment and its working temperature up to the industrial wide temperature: -40℃ to 75 °C. It supports hybrid fiber and Ethernet transmission, POE+/POE++ high power supply, the industrial wide temperature, redundant power supply at full capacity and superior lightning protection and anti-interference ability which fits in various complex environments. It is a high performance/price ratio product in the field of HD IP security surveillance and IoT transmission application.

Specification

Model	S2004-240
Downstream Ports	4 * 10 / 100Base-TX (PoE)
Uplink Ports	2 * 10 / 100 / 1000 Base-TX and 2 * Base-X/SFP (combo)
Network Standard	IEEE802.3, IEEE802.3u, IEEE802.3ab, IEEE802.3z, IEEE802.3X
Switch Capacity	5.6 Gbps
Packet Forwarding Rate	4.2 Mpps
Switch Processing Scheme	Store and Forward
Packet Buffer	1M
MAC Table	8K
PoE Standard	802.3af / at (PSE)
PSE Type	4 pairs wire
Power Pin Assignment	1/2(+), 3/6(-)
PoE Power Output	54V DC, 60 watts max
PoE Budge	240 watts max
Lightning protection	6kV Execute: IEC61000-4-5
ESD	6kV Contact discharge 8kV Air discharge Execute: IEC61000-4-2
Power Supply	48-57 V DC
Power Dissipation	< 6W (Including PoE)
Work temperature	-10 °C ~ 75 °C
Storage temperature	-40 °C ~ 85 °C
Humidity (Non-condensing)	0% - 95%
Dimension (L×W×H)	110 mm x 163 mm x 46 mm
Weight	530 g
Regulator	CE, FCC, ROHS

Designation	Quantity
S2004-240	1
Power Adapter	1
Accessory	1
User Manual	1

Port configuration

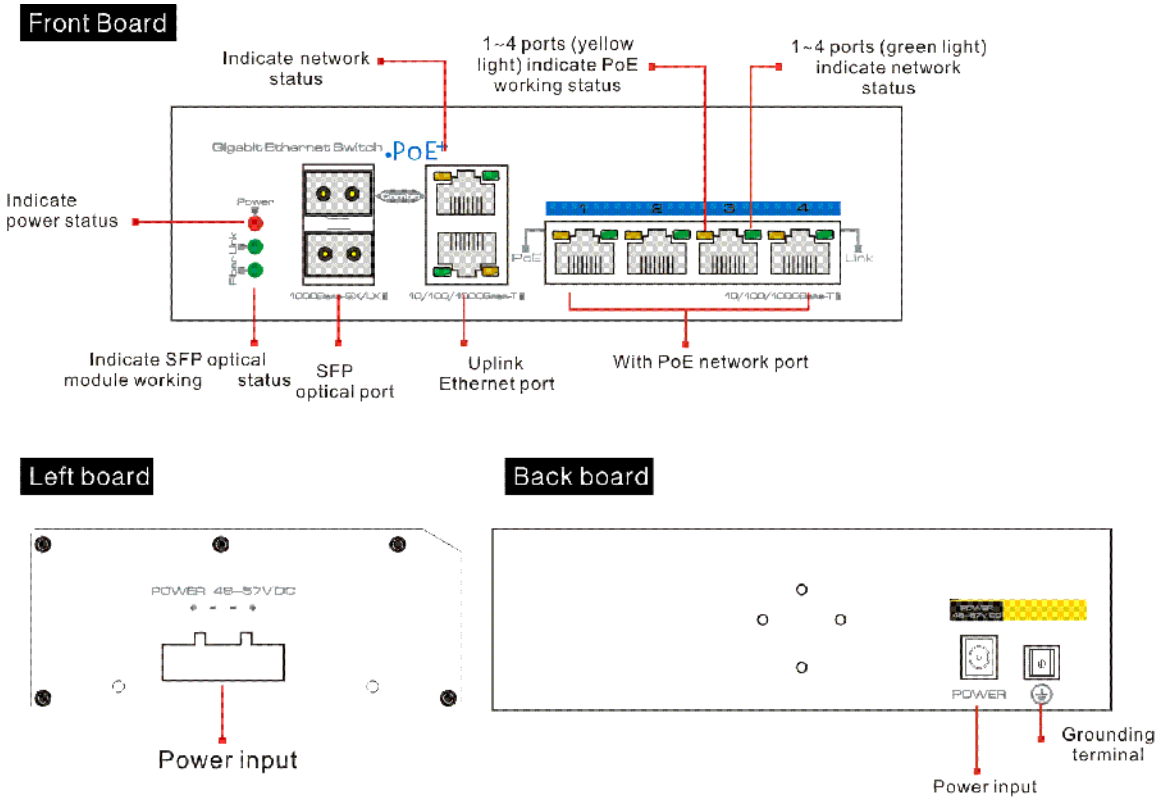

Typical application

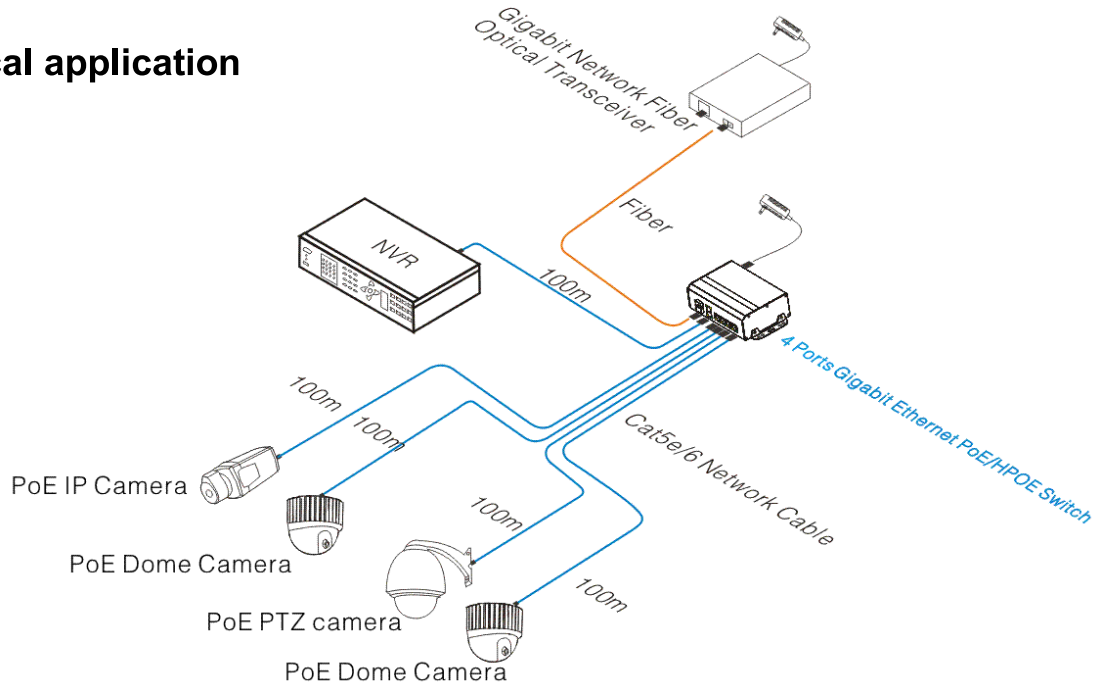

Impreso en Argentina

CYGNUS
electronics